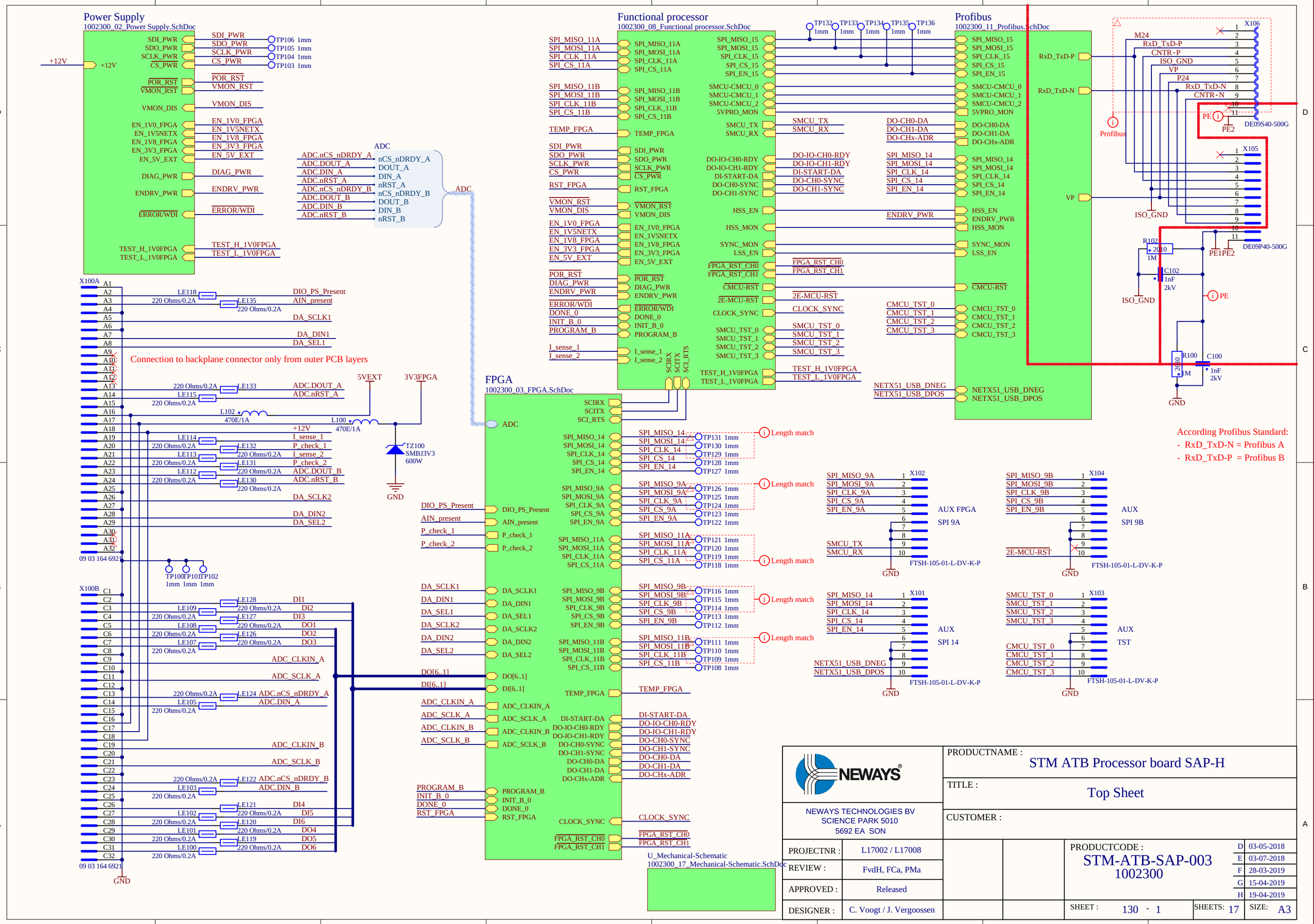
Power Supply
1002300_02_Power Supply.SchDoc
Functional processor
1002300_08_Functional processor.SchDoc
Profibus
1002300_11_Profibus.SchDoc
FPGA
1002300_03_FPGA.SchDoc
ADC
Connection to backplane connector only from outer PCB layers
According Profibus Standard:
- RxD_TxD-N = Profibus A
- RxD_TxD-P = Profibus B
Length match
U_Mechanical-Schematic
1002300_17_Mechanical-Schematic.SchDoc
NEWAYS
NEWAYS TECHNOLOGIES BV
SCIENCE PARK 5010
5692 EA SON
PRODUCTNAME :
STM ATB Processor board SAP-H
TITLE :
Top Sheet
CUSTOMER :
PROJECTNR : L17002 / L17008
REVIEW : FvdH, FCa, PMa
APPROVED : Released
DESIGNER : C. Voogt / J. Vergoossen
PRODUCTCODE :
STM-ATB-SAP-003
1002300
D 03-05-2018
E 03-07-2018
F 28-03-2019
G 15-04-2019
H 19-04-2019
SHEET : 130 - 1
SHEETS: 17
SIZE: A3

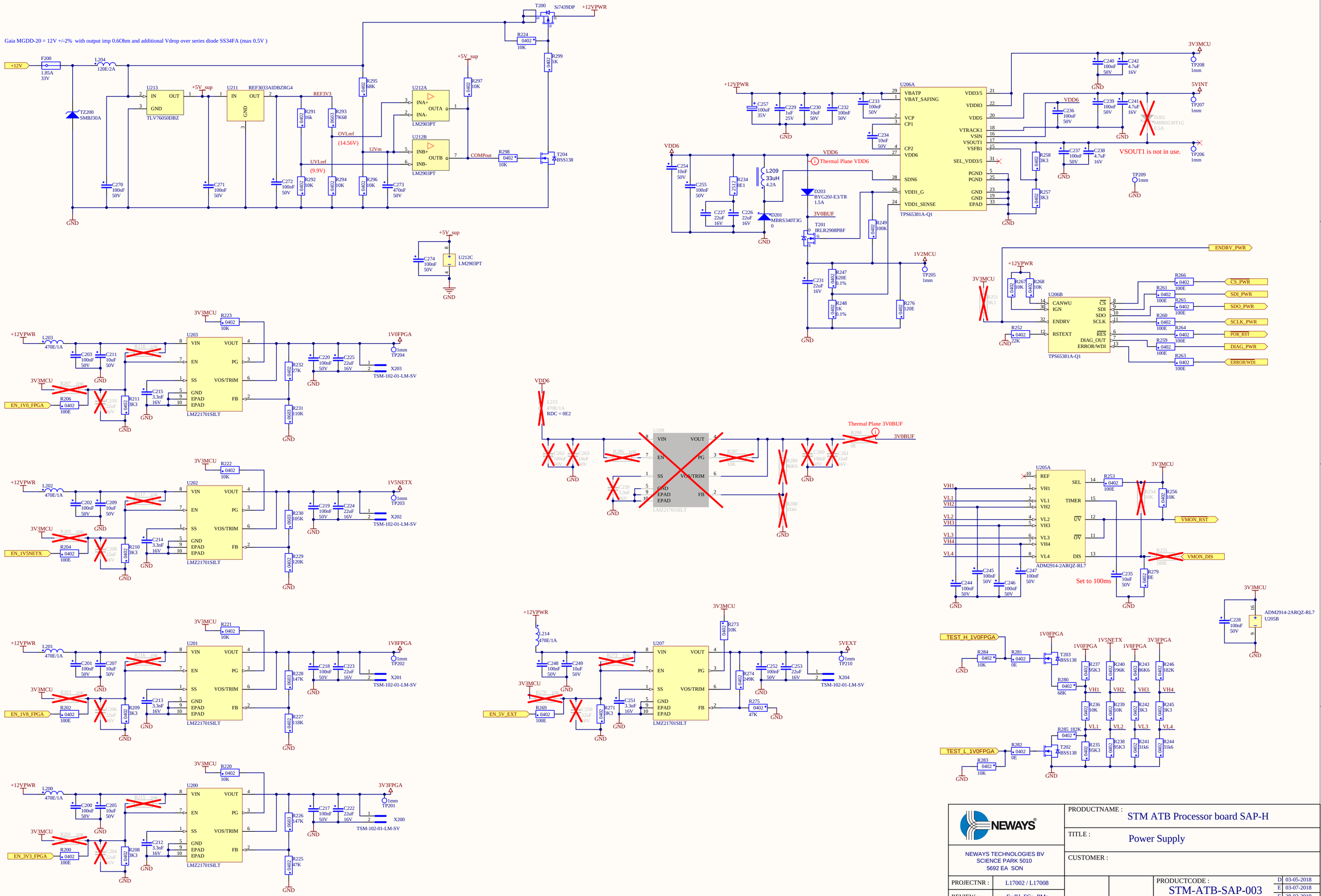

NEWAYS

NEWAYS TECHNOLOGIES BV
SCIENCE PARK 5010
5692 EA SON

PRODUCTNAME : STM ATB Processor board SAP-H

TITLE : Power Supply

CUSTOMER :

PROJECTNR :	L17002 / L17008
REVIEW :	FvdH, FCa, PMa
APPROVED :	Released
DESIGNER :	C. Voogt / J. Vergoossen

PRODUCTCODE : STM-ATB-SAP-003 1002300

D	03-05-2018
E	03-07-2018
F	28-03-2019
G	15-04-2019
H	19-04-2019

SHEET : 130 - 2 SHEETS : 17 SIZE : A2

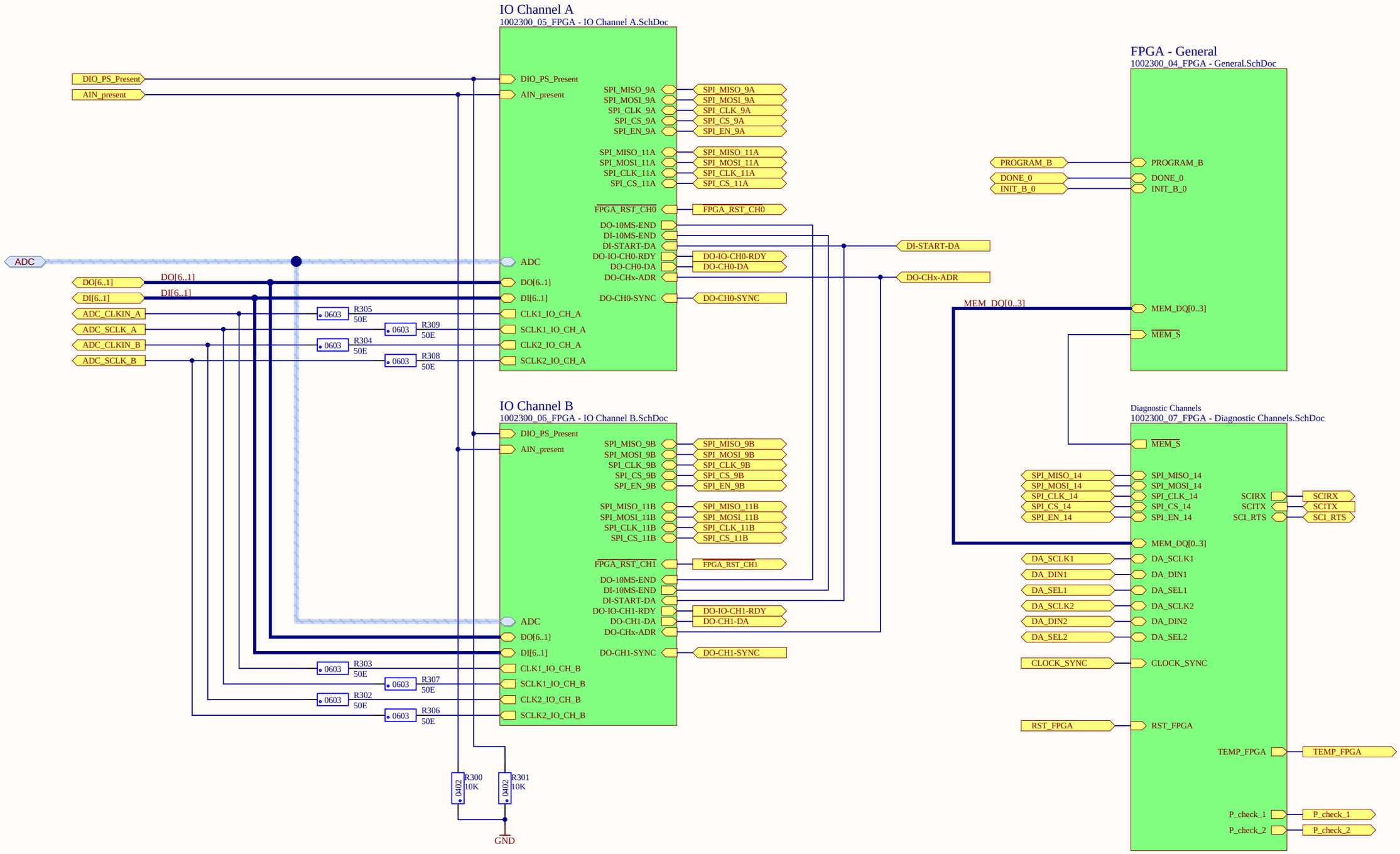

To give the present signal minimum condition.

NEWAYS

NEWAYS TECHNOLOGIES BV
SCIENCE PARK 5010
5692 EA SON

PRODUCTNAME :	STM ATB Processor board SAP-H
TITLE :	FPGA Overview
CUSTOMER :	
PROJECTNR :	L17002 / L17008
REVIEW :	FvdH, FCa, PMa
APPROVED :	Released
DESIGNER :	C. Voogt / J. Vergoossen
PRODUCTCODE :	STM-ATB-SAP-003 1002300
SHEET :	130 - 3
SHEETS:	17
SIZE:	A3

D	03-05-2018
E	03-07-2018
F	28-03-2019
G	15-04-2019
H	19-04-2019

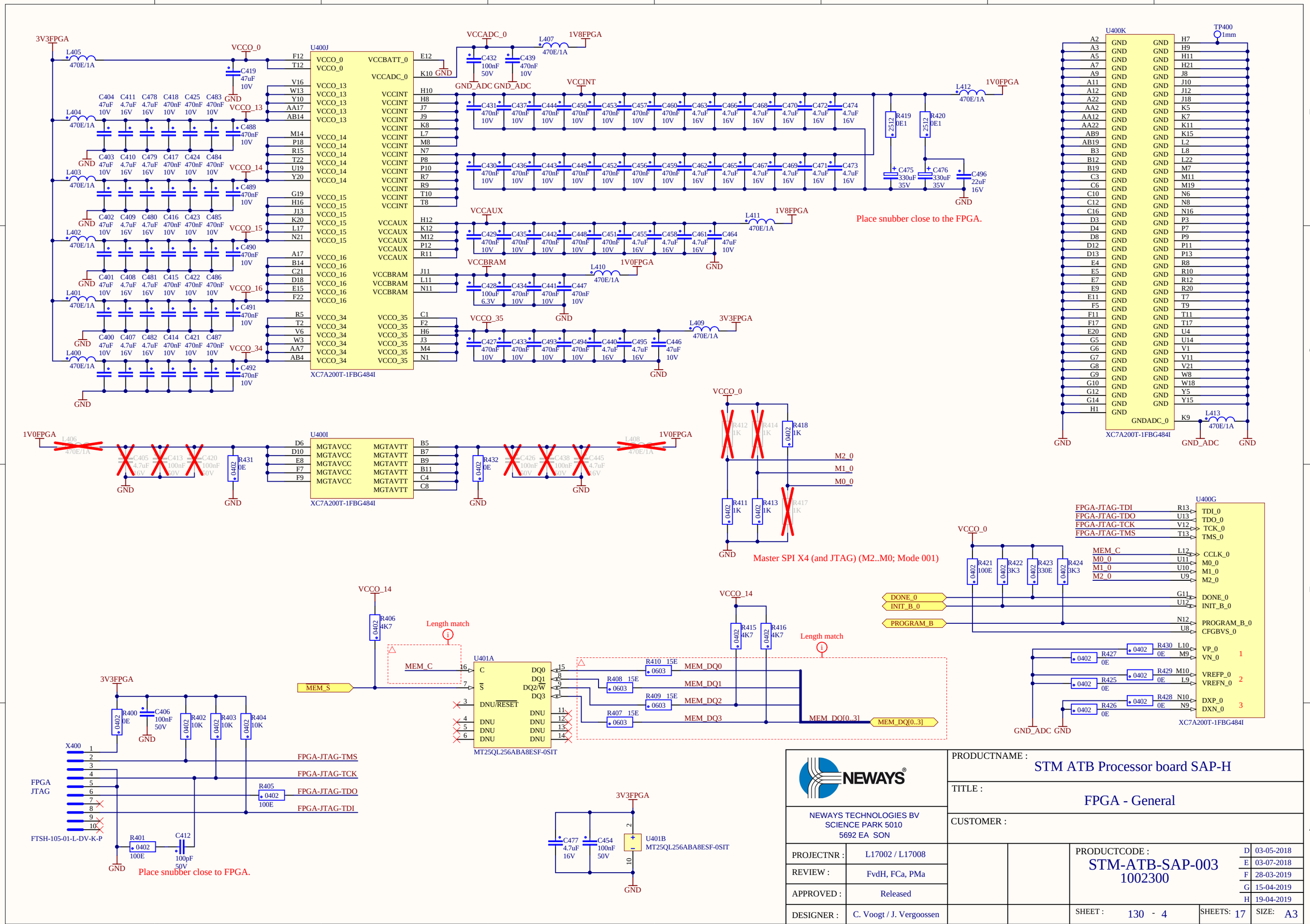
U400J
XC7A200T-1FBG484I
U400K
XC7A200T-1FBG484I
U400I
XC7A200T-1FBG484I
U400G
XC7A200T-1FBG484I
U401A
MT25QL256ABA8ESF-0SIT
U401B
MT25QL256ABA8ESF-0SIT
Place snubber close to the FPGA.
Master SPI X4 (and JTAG) (M2..M0; Mode 001)
Place snubber close to FPGA.
Length match
Length match
FPGA-JTAG-TDI
FPGA-JTAG-TDO
FPGA-JTAG-TCK
FPGA-JTAG-TMS
MEM_DQ[0..3]
FTSH-105-01-L-DV-K-P
FPGA JTAG
NEWAYS
NEWAYS TECHNOLOGIES BV
SCIENCE PARK 5010
5692 EA SON
PRODUCTNAME :
STM ATB Processor board SAP-H
TITLE :
FPGA - General
CUSTOMER :
PROJECTNR : L17002 / L17008
REVIEW : FvdH, FCa, PMa
APPROVED : Released
DESIGNER : C. Voogt / J. Vergoossen
PRODUCTCODE :
STM-ATB-SAP-003
1002300
D 03-05-2018
E 03-07-2018
F 28-03-2019
G 15-04-2019
H 19-04-2019
SHEET : 130 - 4
SHEETS: 17
SIZE: A3

Pinning of FPGA needs to be double checked with Vivado Design Suite of Xilinx FPGA

Banks 16 and 35 are used for IO Channel A

channel 0

U400D — BANK 16 — XC7A200T-1FBG484I

Pin	Net
F15	IO_0_16
F13	IO_L1P_T0_16
F14	IO_L1N_T0_16
F16	IO_L2P_T0_16
E17	IO_L2N_T0_16
C14	IO_L3P_T0_DQS_16
C15	IO_L3N_T0_DQS_16
E13	IO_L4P_T0_16
E14	IO_L4N_T0_16
E16	IO_L5P_T0_16
D16	IO_L5N_T0_16
D14	IO_L6P_T0_16
D15	IO_L6N_T0_VREF_16
B15	IO_L7P_T1_16
B16	IO_L7N_T1_16
C13	IO_L8P_T1_16
B13	IO_L8N_T1_16
A15	IO_L9P_T1_DQS_16
A16	IO_L9N_T1_DQS_16
A13	IO_L10P_T1_16
A14	IO_L10N_T1_16
B17	IO_L11P_T1_SRCC_16
B18	IO_L11N_T1_SRCC_16
D17	IO_L12P_T1_MRCC_16
C17	IO_L12N_T1_MRCC_16
C18	IO_L13P_T2_MRCC_16
C19	IO_L13N_T2_MRCC_16
E19	IO_L14P_T2_SRCC_16
D19	IO_L14N_T2_SRCC_16
F18	IO_L15P_T2_DQS_16
E18	IO_L15N_T2_DQS_16
B20	IO_L16P_T2_16
A20	IO_L16N_T2_16
A18	IO_L17P_T2_16
A19	IO_L17N_T2_16
F19	IO_L18P_T2_16
F20	IO_L18N_T2_16
D20	IO_L19P_T3_16
C20	IO_L19N_T3_VREF_16
C22	IO_L20P_T3_16
B22	IO_L20N_T3_16
B21	IO_L21P_T3_DQS_16
A21	IO_L21N_T3_DQS_16
E22	IO_L22P_T3_16
D22	IO_L22N_T3_16
E21	IO_L23P_T3_16
D21	IO_L23N_T3_16
G21	IO_L24P_T3_16
G22	IO_L24N_T3_16
F21	IO_25_16

U400F — BANK 35 — XC7A200T-1FBG484I

Pin	Net
F4	IO_0_35
B1	IO_L1P_T0_AD4P_35
A1	IO_L1N_T0_AD4N_35
C2	IO_L2P_T0_AD12P_35
B2	IO_L2N_T0_AD12N_35
E1	IO_L3P_T0_DQS_AD5P_35
D1	IO_L3N_T0_DQS_AD5N_35
E2	IO_L4P_T0_35
D2	IO_L4N_T0_35
G1	IO_L5P_T0_AD13P_35
F1	IO_L5N_T0_AD13N_35
F3	IO_L6P_T0_35
E3	IO_L6N_T0_VREF_35
K1	IO_L7P_T1_AD6P_35
J1	IO_L7N_T1_AD6N_35
H2	IO_L8P_T1_AD14P_35
G2	IO_L8N_T1_AD14N_35
K2	IO_L9P_T1_DQS_AD7P_35
J2	IO_L9N_T1_DQS_AD7N_35
J5	IO_L10P_T1_AD15P_35
H5	IO_L10N_T1_AD15N_35
H3	IO_L11P_T1_SRCC_35
G3	IO_L11N_T1_SRCC_35
H4	IO_L12P_T1_MRCC_35
G4	IO_L12N_T1_MRCC_35
K4	IO_L13P_T2_MRCC_35
J4	IO_L13N_T2_MRCC_35
L3	IO_L14P_T2_SRCC_35
K3	IO_L14N_T2_SRCC_35
M1	IO_L15P_T2_DQS_35
L1	IO_L15N_T2_DQS_35
M3	IO_L16P_T2_35
M2	IO_L16N_T2_35
K6	IO_L17P_T2_35
J6	IO_L17N_T2_35
L5	IO_L18P_T2_35
L4	IO_L18N_T2_35
N4	IO_L19P_T3_35
N3	IO_L19N_T3_VREF_35
R1	IO_L20P_T3_35
P1	IO_L20N_T3_35
P5	IO_L21P_T3_DQS_35
P4	IO_L21N_T3_DQS_35
P2	IO_L22P_T3_35
N2	IO_L22N_T3_35
M6	IO_L23P_T3_35
M5	IO_L23N_T3_35
P6	IO_L24P_T3_35
N5	IO_L24N_T3_35
L6	IO_25_35

* Pins L6, P1, P2, P4, P5, P6 and R1 not to be used, to isolate IO channel A and B

Net	Resistor	Value
DIO_PS_Present	R509	0E
AIN_present	R517	0E
DI1	R506	0E
DI2	R513	0E
DI3	R505	0E
DO1	R508	0E
DO2	R514	0E
DO3	R507	0E

CLKx upto 8MHz

SCLKx & Doutx upto 2MHz

ADC

Net	Resistor	Value	Capacitor	Value
ADC.nCS_nDRDY_A	R500	50E	C500	100pF 50V
ADC.DOUT_A	R501	50E	C501	100pF 50V
ADC.DIN_A	R502	50E	C502	100pF 50V
ADC.nRST_A	R510	50E	C503	100pF 50V

AC Line Termination

GND

Pin	Net
TP515	TST-DO-CH0_1
TP514	TST-DO-CH0_2
TP513	TST-DO-CH0_3
TP512	TST-DO-CH0_4
TP511	TST-DO-CH0_5
TP510	TST-DO-CH0_6
TP509	TST-DO-CH0_7
TP508	TST-DO-CH0_8
TP507	TST-DI-CH0_1
TP506	TST-DI-CH0_2
TP505	TST-DI-CH0_3
TP504	TST-DI-CH0_4
TP503	TST-DI-CH0_5
TP502	TST-DI-CH0_6
TP501	TST-DI-CH0_7
TP500	TST-DI-CH0_8

VCCO_16 — R519 1K — VREF_16 — R518 1K — GND

VCCO_35 — R525 1K — VREF_35 — R524 1K — GND

3V3FPGA — R521 68E, R523 68E — LD500A 592-3030313F — T500 BSS138, T501 BSS138 — R520 10K, R522 10K — GND

PRODUCTNAME :	STM ATB Processor board SAP-H
TITLE :	FPGA - IO Channel A
CUSTOMER :	

NEWAYS TECHNOLOGIES BV
SCIENCE PARK 5010
5692 EA SON

PROJECTNR :	L17002 / L17008
REVIEW :	FvdH, FCa, PMa
APPROVED :	Released
DESIGNER :	C. Voogt / J. Vergoossen

PRODUCTCODE : STM-ATB-SAP-003 1002300

D	03-05-2018
E	03-07-2018
F	28-03-2019
G	15-04-2019
H	19-04-2019

SHEET : 130 - 5 SHEETS: 17 SIZE: A3

Pinning of FPGA needs to be double checked with Vivado Design Suite of Xilinx FPGA

Banks 34 and 13 are used for IO Channel B

channel 1

U400E — BANK 34 — XC7A200T-1FBG484I

Pin	Signal
T3	IO_0_34
T1	IO_L1P_T0_34
U1	IO_L1N_T0_34
U2	IO_L2P_T0_34
V2	IO_L2N_T0_34
R3	IO_L3P_T0_DQS_34
R2	IO_L3N_T0_DQS_34
W2	IO_L4P_T0_34
Y2	IO_L4N_T0_34
W1	IO_L5P_T0_34
Y1	IO_L5N_T0_34
U3	IO_L6P_T0_34
V3	IO_L6N_T0_VREF_34
AA1	IO_L7P_T1_34
AB1	IO_L7N_T1_34
AB3	IO_L8P_T1_34
AB2	IO_L8N_T1_34
Y3	IO_L9P_T1_DQS_34
AA3	IO_L9N_T1_DQS_34
AA5	IO_L10P_T1_34
AB5	IO_L10N_T1_34
Y4	IO_L11P_T1_SRCC_34
AA4	IO_L11N_T1_SRCC_34
V4	IO_L12P_T1_MRCC_34
W4	IO_L12N_T1_MRCC_34
R4	IO_L13P_T2_MRCC_34
T4	IO_L13N_T2_MRCC_34
T5	IO_L14P_T2_SRCC_34
U5	IO_L14N_T2_SRCC_34
W6	IO_L15P_T2_DQS_34
W5	IO_L15N_T2_DQS_34
U6	IO_L16P_T2_34
V5	IO_L16N_T2_34
R6	IO_L17P_T2_34
T6	IO_L17N_T2_34
Y6	IO_L18P_T2_34
AA6	IO_L18N_T2_34
V7	IO_L19P_T3_34
W7	IO_L19N_T3_VREF_34
AB7	IO_L20P_T3_34
AB6	IO_L20N_T3_34
V9	IO_L21P_T3_DQS_34
V8	IO_L21N_T3_DQS_34
AA8	IO_L22P_T3_34
AB8	IO_L22N_T3_34
Y8	IO_L23P_T3_34
Y7	IO_L23N_T3_34
W9	IO_L24P_T3_34
Y9	IO_L24N_T3_34
U7	IO_25_34

FPGA_RED_1 — T3
FPGA_GREEN_1 — Y2
VREF_34 — V3, W7

DIO_PS_Present — R614 0402 0E
AIN_present — R617 0402 0E

FPGA_RST_CH1
DI-START-DA
DO-IO-CH1-RDY
DO-10MS-END
DI-10MS-END
DO-CH1-DA
DO-CHx-ADR
DO-CH1-SYNC
SPI_MISO_9B
SPI_MOSI_9B
SPI_CLK_9B
SPI_CS_9B
SPI_EN_9B
SPI_CS_11B
SPI_MISO_11B
SPI_MOSI_11B
SPI_CLK_11B

DI[6..1] — DI[6..1]
DI4 — R611 0402 0E
DI5 — R605 0402 0E
DI6 — R610 0402 0E
CLK1_IO_CH_B
SCLK1_IO_CH_B
CLK2_IO_CH_B
SCLK2_IO_CH_B

DO[6..1] — DO[6..1]
DO4 — R613 0402 0E
DO5 — R606 0402 0E
DO6 — R612 0402 0E

ADC
nCS_nDRDY_A
DOUT_A
DIN_A
nRST_A
nCS_nDRDY_B
DOUT_B
DIN_B
nRST_B

ADC.nCS_nDRDY_B
ADC.DOUT_B
ADC.DIN_B
ADC.nRST_B

U400A — BANK 13 — XC7A200T-1FBG484I

Pin	Signal
Y17	IO_0_13
Y16	IO_L1P_T0_13
AA16	IO_L1N_T0_13
AB16	IO_L2P_T0_13
AB17	IO_L2N_T0_13
AA13	IO_L3P_T0_DQS_13
AB13	IO_L3N_T0_DQS_13
AA15	IO_L4P_T0_13
AB15	IO_L4N_T0_13
Y13	IO_L5P_T0_13
AA14	IO_L5N_T0_13
W14	IO_L6P_T0_13
Y14	IO_L6N_T0_VREF_13
AB11	IO_L7P_T1_13
AB12	IO_L7N_T1_13
AA9	IO_L8P_T1_13
AB10	IO_L8N_T1_13
AA10	IO_L9P_T1_DQS_13
AA11	IO_L9N_T1_DQS_13
V10	IO_L10P_T1_13
W10	IO_L10N_T1_13
Y11	IO_L11P_T1_SRCC_13
Y12	IO_L11N_T1_SRCC_13
W11	IO_L12P_T1_MRCC_13
W12	IO_L12N_T1_MRCC_13
V13	IO_L13P_T2_MRCC_13
V14	IO_L13N_T2_MRCC_13
U15	IO_L14P_T2_SRCC_13
V15	IO_L14N_T2_SRCC_13
T14	IO_L15P_T2_DQS_13
T15	IO_L15N_T2_DQS_13
W15	IO_L16P_T2_13
W16	IO_L16N_T2_13
T16	IO_L17P_T2_13
U16	IO_L17N_T2_13

VREF_13 — Y14

TP614 0.8mm — TST-DO-CH1_2
TP613 0.8mm — TST-DO-CH1_3
TP612 0.8mm — TST-DO-CH1_4
TP610 0.8mm — TST-DO-CH1_6
TP609 0.8mm — TST-DO-CH1_7
TP608 0.8mm — TST-DO-CH1_8
TP607 0.8mm — TST-DI-CH1_1
TP615 0.8mm — TST-DO-CH1_1
TP605 0.8mm — TST-DI-CH1_3
TP604 0.8mm — TST-DI-CH1_4
TP603 0.8mm — TST-DI-CH1_5
TP602 0.8mm — TST-DI-CH1_6
TP601 0.8mm — TST-DI-CH1_7
TP600 0.8mm — TST-DI-CH1_8
TP606 0.8mm — TST-DI-CH1_2
TP611 0.8mm — TST-DO-CH1_5

* Pins T14, T15, T16, U16, W16, Y16, Y17 and AB17 not to be used, to isolate IO Channel A and B

AC Line Termination

R600 0603 50E — C600 100pF 50V
R601 0603 50E — C601 100pF 50V
R602 0603 50E — C602 100pF 50V
R607 0603 50E — C603 100pF 50V
GND

VCCO_34 — R619 0402 1K — VREF_34 — R618 0402 1K — GND

3V3FPGA
R621 0603 68E
R623 0603 68E
LD500B 592-3030313F (2B, R, 3B, G, 1B, 4B, POS2)
FPGA_RED_1 — T600 BSS138
FPGA_GREEN_1 — T601 BSS138
R620 0402 10K
R622 0402 10K
GND

VCCO_13 — R625 0402 1K — VREF_13 — R624 0402 1K — GND

NEWAYS
NEWAYS TECHNOLOGIES BV
SCIENCE PARK 5010
5692 EA SON

PRODUCTNAME : STM ATB Processor board SAP-H
TITLE : FPGA - IO Channel B
CUSTOMER :

PROJECTNR :	L17002 / L17008
REVIEW :	FvdH, FCa, PMa
APPROVED :	Released
DESIGNER :	C. Voogt / J. Vergoossen

PRODUCTCODE : STM-ATB-SAP-003 1002300

D	03-05-2018
E	03-07-2018
F	28-03-2019
G	15-04-2019
H	19-04-2019

SHEET : 130 - 6 SHEETS: 17 SIZE: A3

Pinning of FPGA needs to be double checked with Vivado Design Suite of Xilinx FPGA

Diagnostic Channels

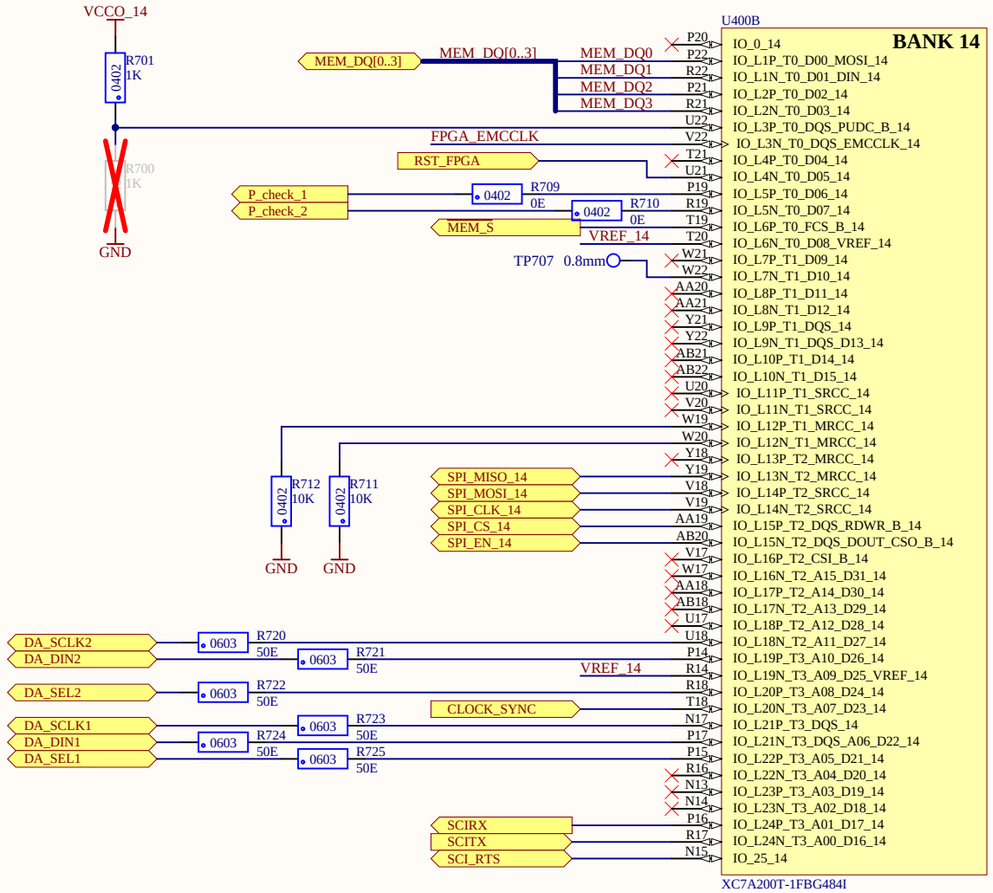

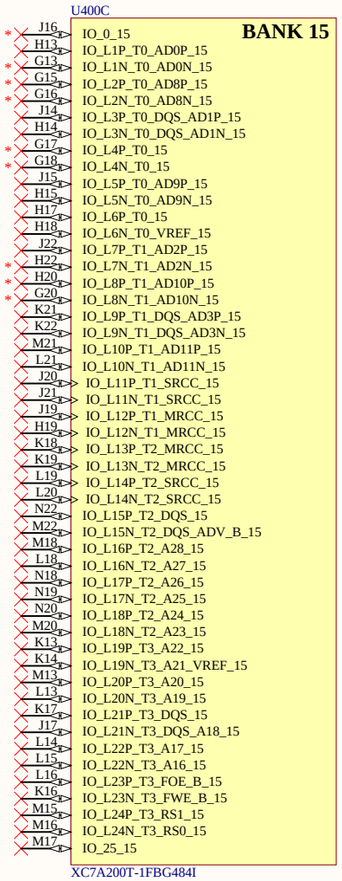

* Pins G13, G15, G16, G17, G18, G20, H20, H22 and J16 not to be used, to isolate channel A and B

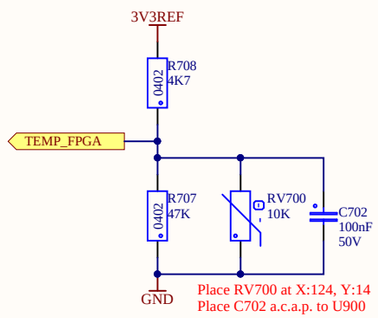

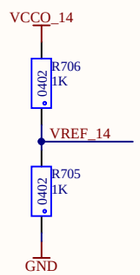

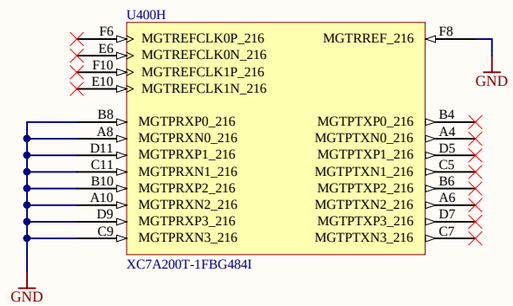

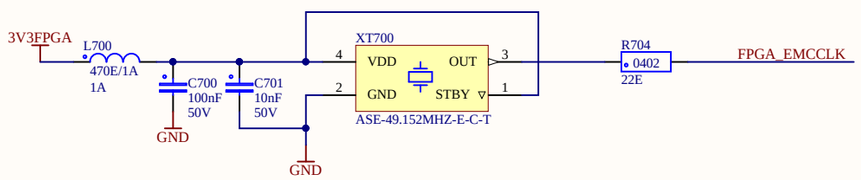

NEWAYS TECHNOLOGIES BV SCIENCE PARK 5010 5692 EA SON	PRODUCTNAME : STM ATB Processor board SAP-H		
	TITLE : FPGA - Diagnostic Channels		
	CUSTOMER :		
PROJECTNR : L17002 / L17008	PRODUCTCODE : STM-ATB-SAP-003 1002300	D	03-05-2018
REVIEW : FvdH, FCa, PMa		E	03-07-2018
APPROVED : Released		F	28-03-2019
		G	15-04-2019
DESIGNER : C. Voogt / J. Vergoossen	SHEET : 130 - 7 / SHEETS: 17	H	19-04-2019
	SIZE: A3		

Functional processor - Digital I/O

1002300_10_Functional processor - IO.SchDoc

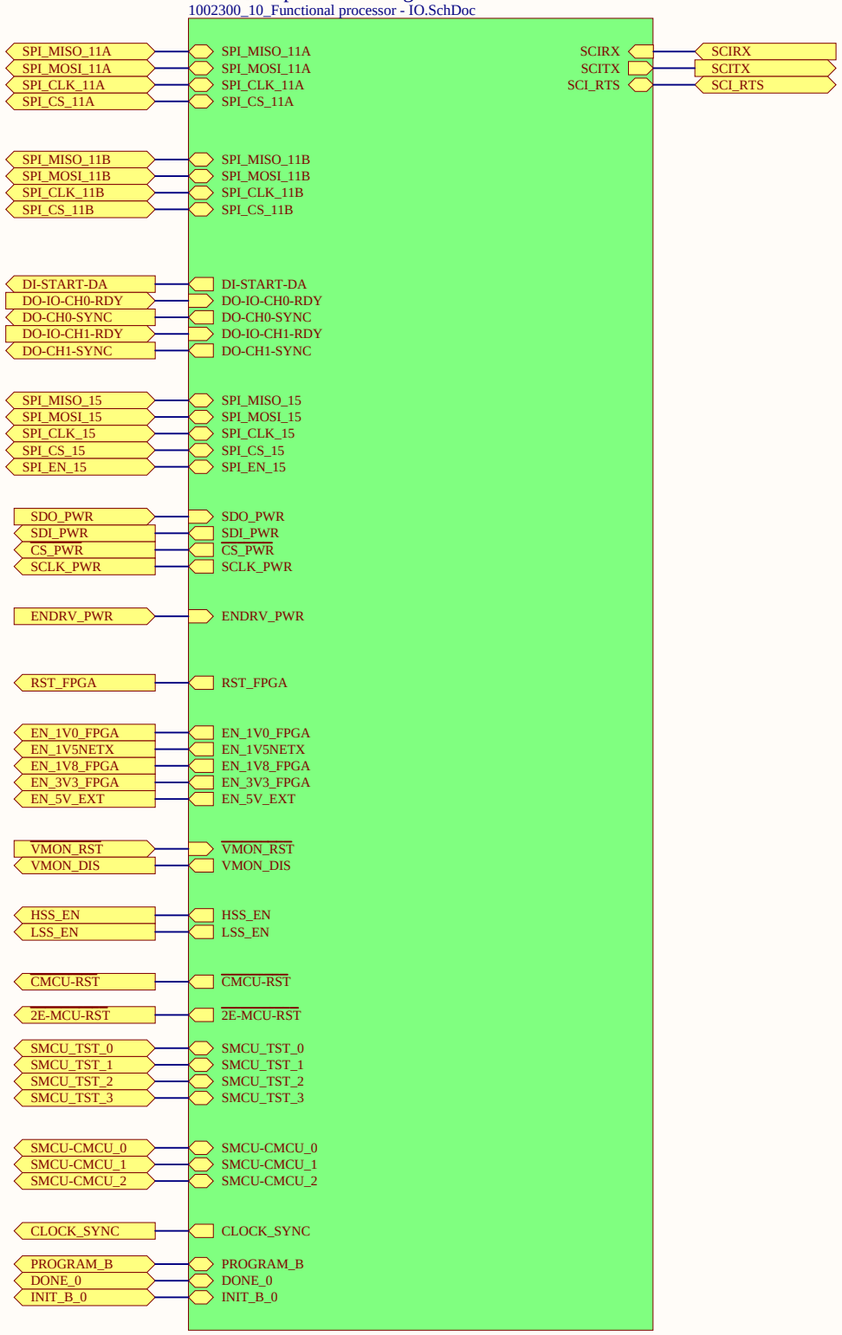

Functional processor - Power, ADC, Communication, Clock

1002300_09_Functional processor - PWR ADC COM CLK.SchDoc

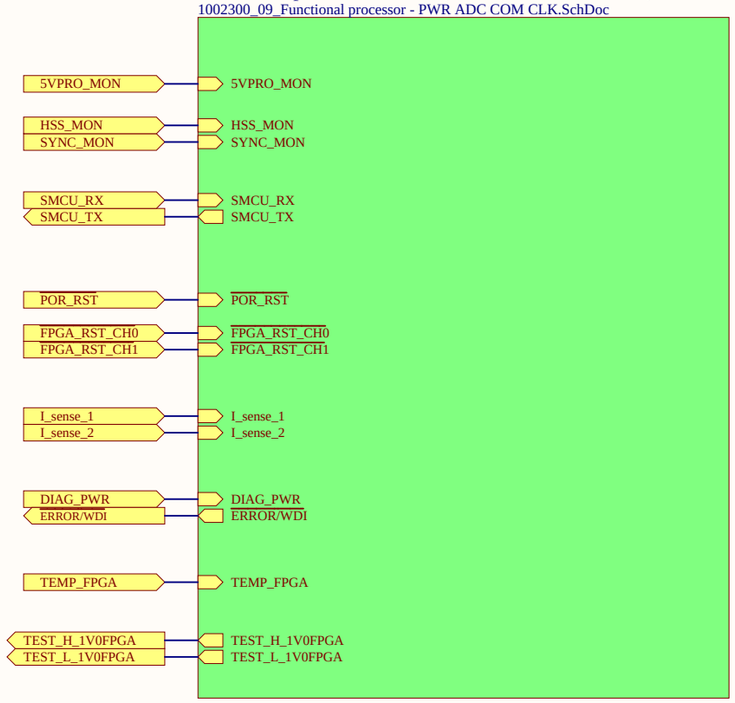

NEWAYS

NEWAYS TECHNOLOGIES BV
SCIENCE PARK 5010
5692 EA SON

PRODUCTNAME : STM ATB Processor board SAP-H

TITLE : Safety processor Overview

CUSTOMER :

PROJECTNR :	L17002 / L17008
REVIEW :	FvdH, FCa, PMa
APPROVED :	Released
DESIGNER :	C. Voogt / J. Vergoossen

PRODUCTCODE : STM-ATB-SAP-003 1002300

D	03-05-2018
E	03-07-2018
F	28-03-2019
G	15-04-2019
H	19-04-2019

SHEET : 130 - 8 SHEETS: 17 SIZE: A3

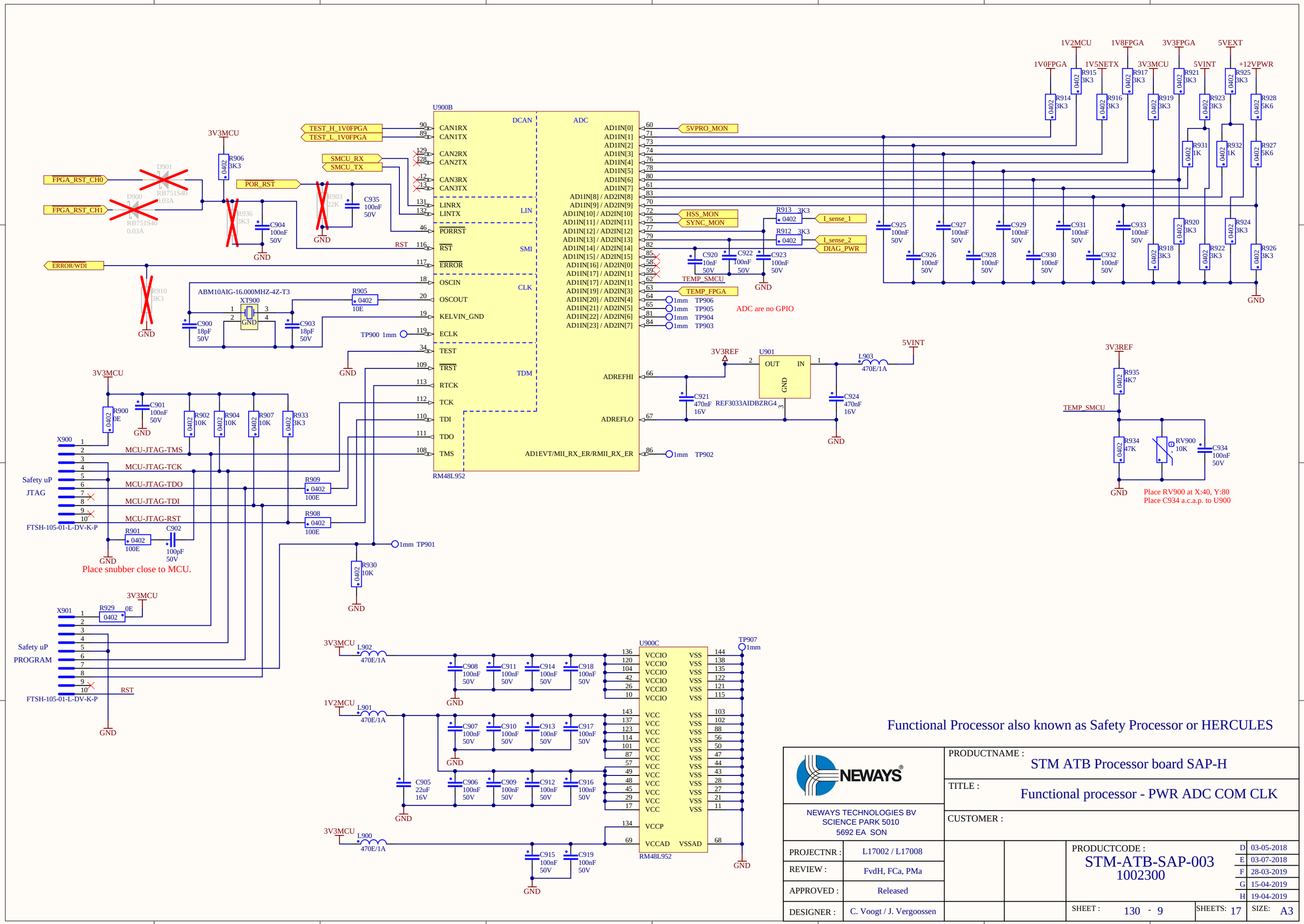

Functional Processor also known as Safety Processor or HERCULES

NEWAYS

NEWAYS TECHNOLOGIES BV
SCIENCE PARK 5010
5692 EA SON

PRODUCTNAME : STM ATB Processor board SAP-H

TITLE : Functional processor - PWR ADC COM CLK

CUSTOMER :

PROJECTNR :	L17002 / L17008
REVIEW :	FvdH, FCa, PMa
APPROVED :	Released
DESIGNER :	C. Voogt / J. Vergoossen

PRODUCTCODE : STM-ATB-SAP-003 1002300

D	03-05-2018
E	03-07-2018
F	28-03-2019
G	15-04-2019
H	19-04-2019

SHEET : 130 - 9 SHEETS: 17 SIZE: A3

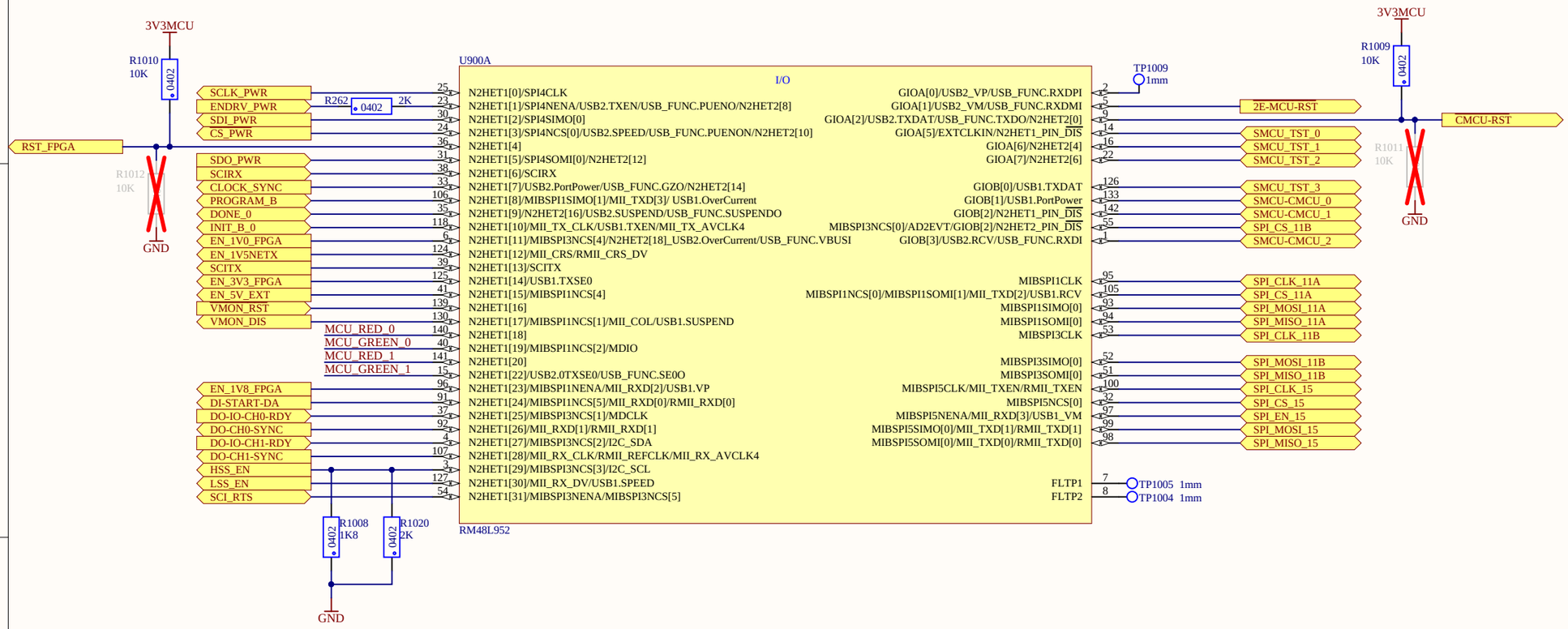

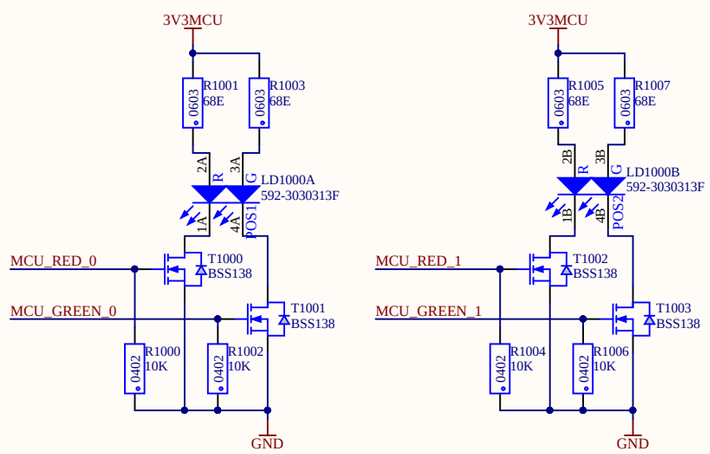

Functional Processor also known as Safety Processor or HERCULES

NEWAYS TECHNOLOGIES BV SCIENCE PARK 5010 5692 EA SON		PRODUCTNAME : STM ATB Processor board SAP-H			
		TITLE : Functional processor - IO			
		CUSTOMER :			
PROJECTNR :	L17002 / L17008	PRODUCTCODE : STM-ATB-SAP-003 1002300	D	03-05-2018	
REVIEW :	FvdH, FCa, PMa		E	03-07-2018	
APPROVED :	Released		F	28-03-2019	
			G	15-04-2019	
			H	19-04-2019	
DESIGNER :	C. Voogt / J. Vergoossen	SHEET : 130 - 10	SHEETS: 17	SIZE: A3	

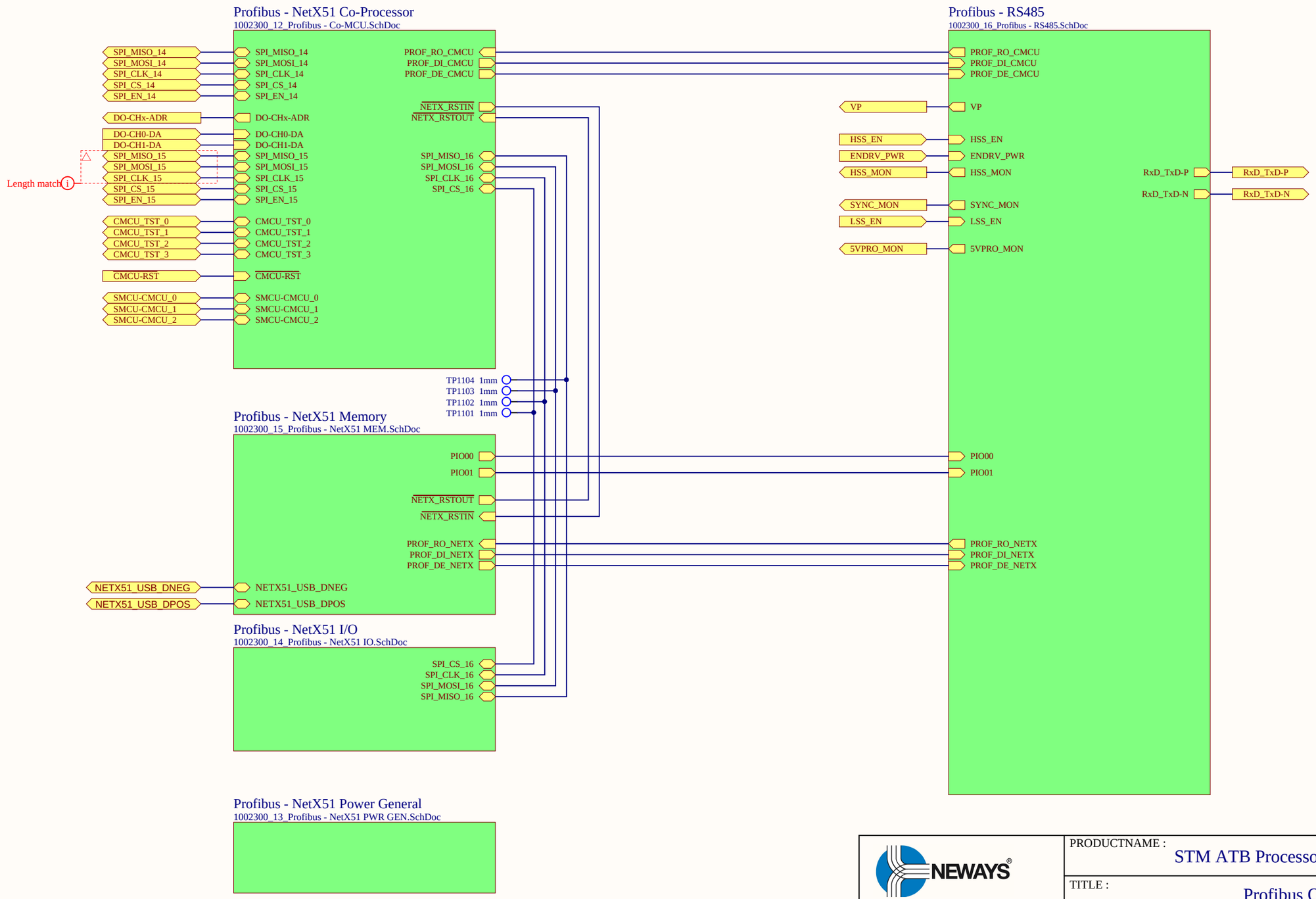

NEWAYS

NEWAYS TECHNOLOGIES BV
SCIENCE PARK 5010
5692 EA SON

PRODUCTNAME : STM ATB Processor board SAP-H

TITLE : Profibus Overview

CUSTOMER :

PROJECTNR :	L17002 / L17008
REVIEW :	FvdH, FCa, PMa
APPROVED :	Released
DESIGNER :	C. Voogt / J. Vergoossen

PRODUCTCODE : STM-ATB-SAP-003
1002300

D	03-05-2018
E	03-07-2018
F	28-03-2019
G	15-04-2019
H	19-04-2019

SHEET : 130 - 11 SHEETS: 17 SIZE: A3

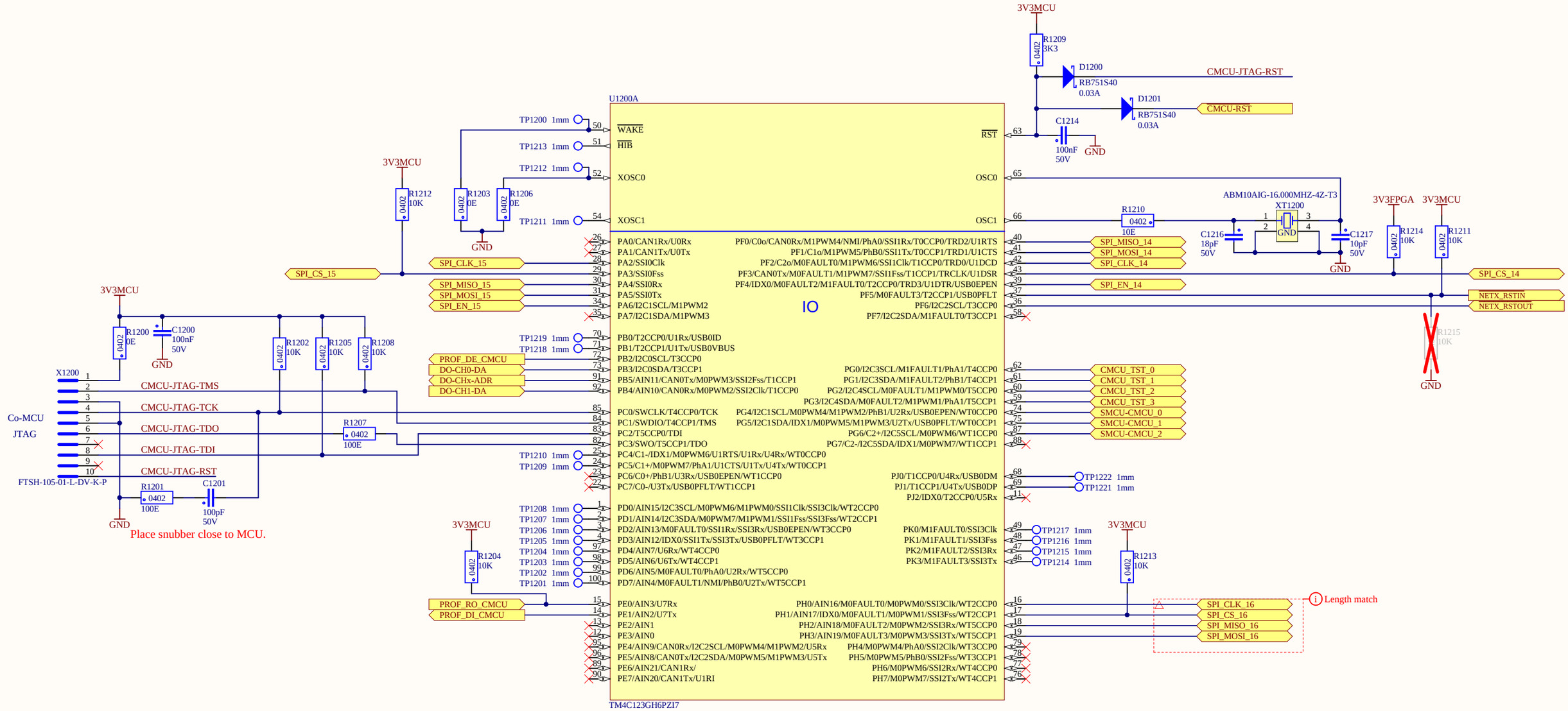

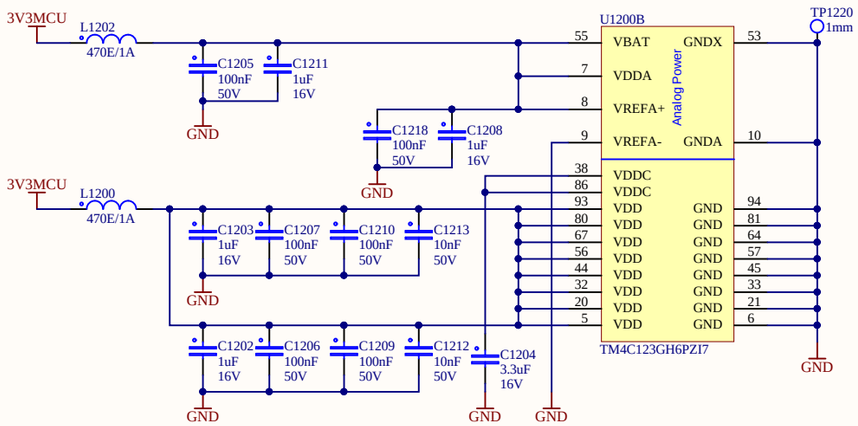

Co-MCU also known as Profibus Processor or TIVA

NEWAYS

NEWAYS TECHNOLOGIES BV
SCIENCE PARK 5010
5692 EA SON

PRODUCTNAME :	STM ATB Processor board SAP-H
TITLE :	Profibus - Co-MCU
CUSTOMER :	
PROJECTNR :	L17002 / L17008
REVIEW :	FvdH, FCa, PMa
APPROVED :	Released
DESIGNER :	C. Voogt / J. Vergoossen
PRODUCTCODE :	STM-ATB-SAP-003 1002300
SHEET :	130 - 12
SHEETS:	17
SIZE:	A3

D	03-05-2018
E	03-07-2018
F	28-03-2019
G	15-04-2019
H	19-04-2019

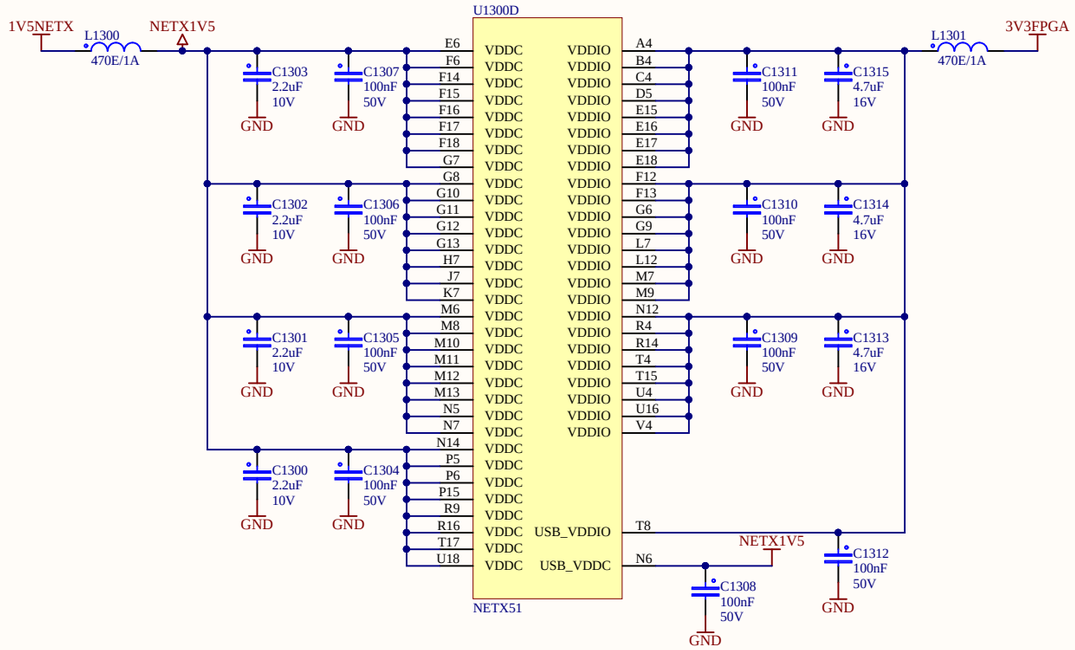

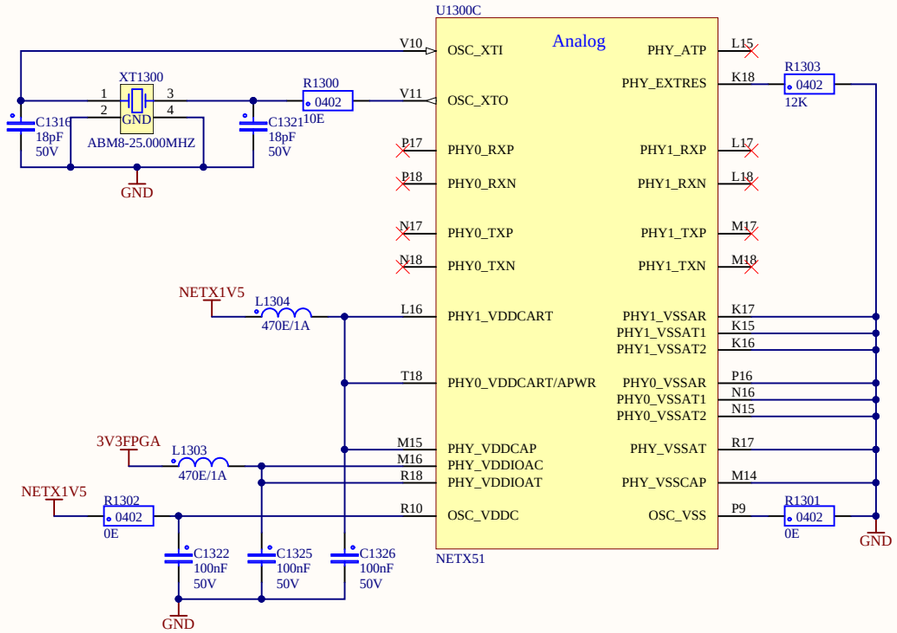

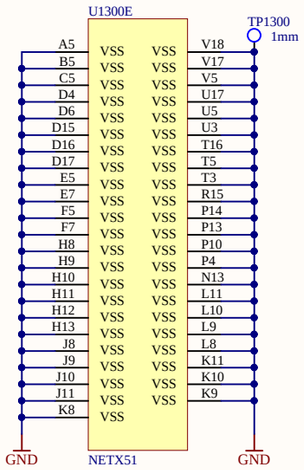

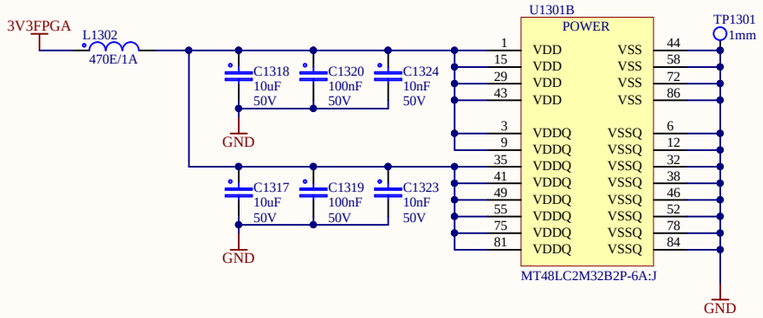

NEWAYS

NEWAYS TECHNOLOGIES BV
SCIENCE PARK 5010
5692 EA SON

PRODUCTNAME : STM ATB Processor board SAP-H

TITLE : Profibus - NetX51 PWR GEN

CUSTOMER :

PROJECTNR :	L17002 / L17008
REVIEW :	FvdH, FCa, PMa
APPROVED :	Released
DESIGNER :	C. Voogt / J. Vergoossen

PRODUCTCODE : STM-ATB-SAP-003 1002300

D	03-05-2018
E	03-07-2018
F	28-03-2019
G	15-04-2019
H	19-04-2019

SHEET : 130 - 13 SHEETS: 17 SIZE: A3

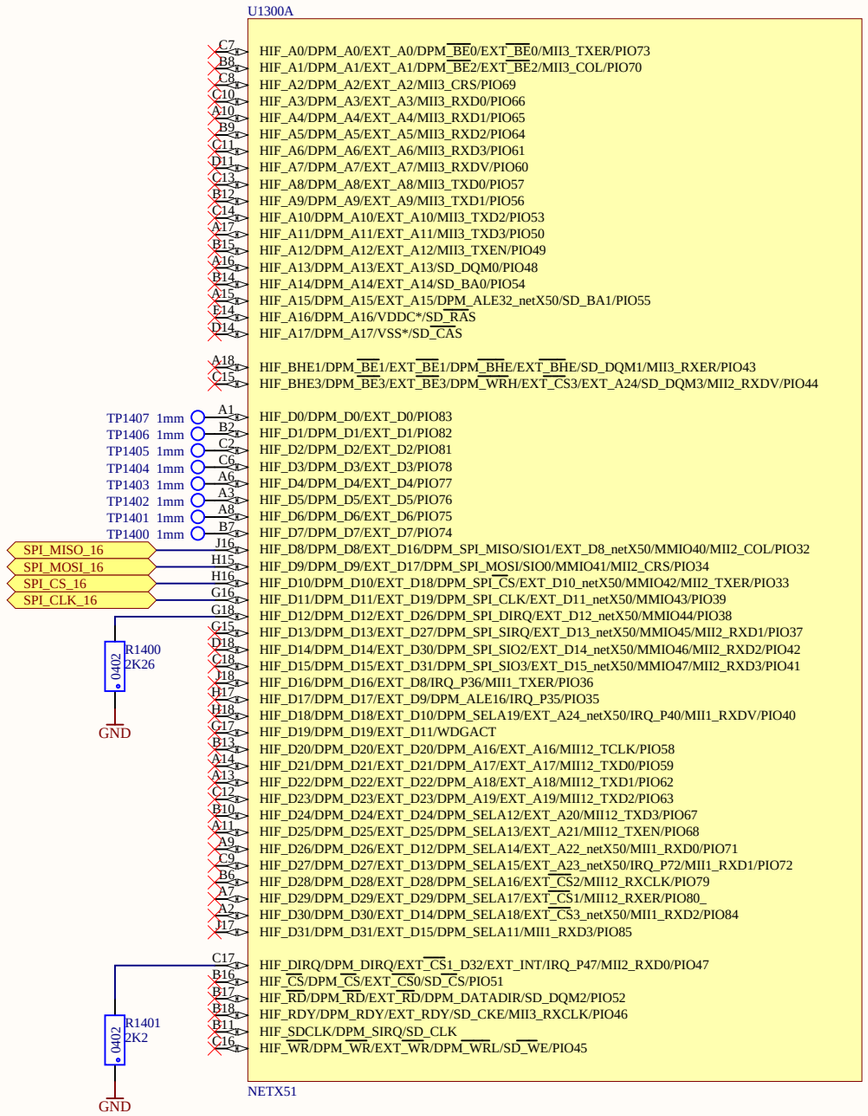

NEWAYS

NEWAYS TECHNOLOGIES BV
SCIENCE PARK 5010
5692 EA SON

PRODUCTNAME : STM ATB Processor board SAP-H

TITLE : Profibus - NetX51 IO

CUSTOMER :

PROJECTNR :	L17002 / L17008
REVIEW :	FvdH, FCa, PMa
APPROVED :	Released
DESIGNER :	C. Voogt / J. Vergoossen

PRODUCTCODE : STM-ATB-SAP-003 1002300

D	03-05-2018
E	03-07-2018
F	28-03-2019
G	15-04-2019
H	19-04-2019

SHEET : 130 - 14 SHEETS: 17 SIZE: A3

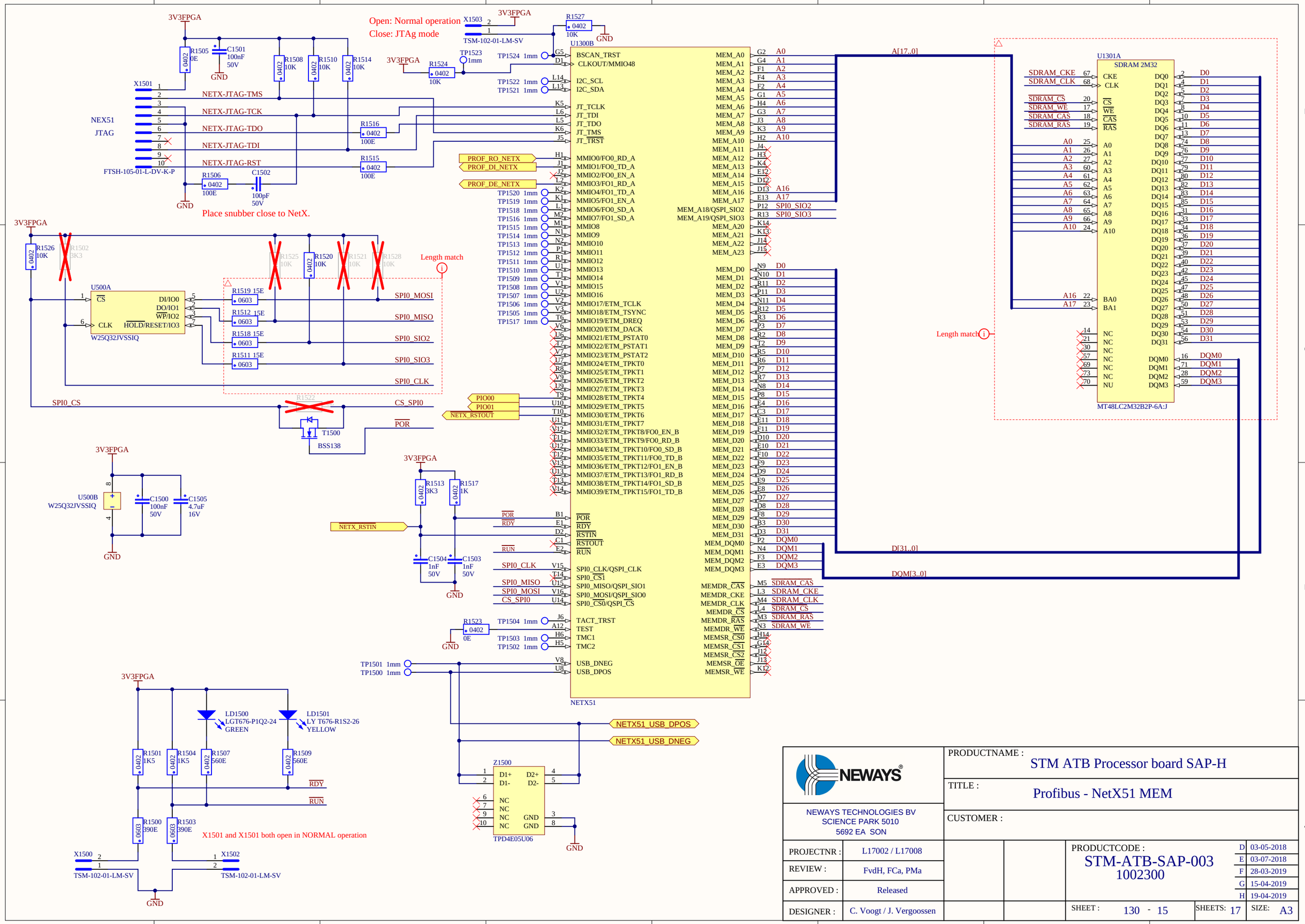
Open: Normal operation
Close: JTAg mode
X1503
TSM-102-01-LM-SV
R1527 0402 10K
GND
3V3FPGA
R1505 0402 0E
C1501 100nF 50V
R1508 0402 10K
R1510 0402 10K
R1514 0402 10K
X1501
NEX51
JTAG
NETX-JTAG-TMS
NETX-JTAG-TCK
NETX-JTAG-TDO
NETX-JTAG-TDI
NETX-JTAG-RST
FTSH-105-01-L-DV-K-P
R1516 0402 100E
R1515 0402 100E
R1506 0402 100E
C1502 100pF 50V
Place snubber close to NetX.
R1524 0402 10K
TP1523 1mm
TP1524 1mm
TP1522 1mm
TP1521 1mm
U1300B
BSCAN_TRST
CLKOUT/MMIO48
I2C_SCL
I2C_SDA
JT_TCLK
JT_TDI
JT_TDO
JT_TMS
JT_TRST
PROF_RO_NETX
PROF_DI_NETX
PROF_DE_NETX
MMIO0/FO0_RD_A
MMIO1/FO0_TD_A
MMIO2/FO0_EN_A
MMIO3/FO1_RD_A
MMIO4/FO1_TD_A
MMIO5/FO1_EN_A
MMIO6/FO0_SD_A
MMIO7/FO1_SD_A
MMIO8
MMIO9
MMIO10
MMIO11
MMIO12
MMIO13
MMIO14
MMIO15
MMIO16
MMIO17/ETM_TCLK
MMIO18/ETM_TSYNC
MMIO19/ETM_DREQ
MMIO20/ETM_DACK
MMIO21/ETM_PSTAT0
MMIO22/ETM_PSTAT1
MMIO23/ETM_PSTAT2
MMIO24/ETM_TPKT0
MMIO25/ETM_TPKT1
MMIO26/ETM_TPKT2
MMIO27/ETM_TPKT3
MMIO28/ETM_TPKT4
MMIO29/ETM_TPKT5
MMIO30/ETM_TPKT6
MMIO31/ETM_TPKT7
MMIO32/ETM_TPKT8/FO0_EN_B
MMIO33/ETM_TPKT9/FO0_RD_B
MMIO34/ETM_TPKT10/FO0_SD_B
MMIO35/ETM_TPKT11/FO0_TD_B
MMIO36/ETM_TPKT12/FO1_EN_B
MMIO37/ETM_TPKT13/FO1_RD_B
MMIO38/ETM_TPKT14/FO1_SD_B
MMIO39/ETM_TPKT15/FO1_TD_B
PIO00
PIO01
NETX_RSTOUT
POR
RDY
RSTIN
RSTOUT
RUN
SPI0_CLK/QSPI_CLK
SPI0_CS1
SPI0_MISO/QSPI_SIO1
SPI0_MOSI/QSPI_SIO0
SPI0_CS0/QSPI_CS
TACT_TRST
TEST
TMC1
TMC2
USB_DNEG
USB_DPOS
MEM_A0
MEM_A1
MEM_A2
MEM_A3
MEM_A4
MEM_A5
MEM_A6
MEM_A7
MEM_A8
MEM_A9
MEM_A10
MEM_A11
MEM_A12
MEM_A13
MEM_A14
MEM_A15
MEM_A16
MEM_A17
MEM_A18/QSPI_SIO2
MEM_A19/QSPI_SIO3
MEM_A20
MEM_A21
MEM_A22
MEM_A23
MEM_D0
MEM_D1
MEM_D2
MEM_D3
MEM_D4
MEM_D5
MEM_D6
MEM_D7
MEM_D8
MEM_D9
MEM_D10
MEM_D11
MEM_D12
MEM_D13
MEM_D14
MEM_D15
MEM_D16
MEM_D17
MEM_D18
MEM_D19
MEM_D20
MEM_D21
MEM_D22
MEM_D23
MEM_D24
MEM_D25
MEM_D26
MEM_D27
MEM_D28
MEM_D29
MEM_D30
MEM_D31
MEM_DQM0
MEM_DQM1
MEM_DQM2
MEM_DQM3
MEMDR_CAS
MEMDR_CKE
MEMDR_CLK
MEMDR_CS
MEMDR_RAS
MEMDR_WE
MEMSR_CS0
MEMSR_CS1
MEMSR_CS2
MEMSR_OE
MEMSR_WE
NETX51
A[17..0]
D[31..0]
DQM[3..0]
U1301A
SDRAM 2M32
SDRAM_CKE
SDRAM_CLK
SDRAM_CS
SDRAM_WE
SDRAM_CAS
SDRAM_RAS
MT48LC2M32B2P-6A:J
Length match
R1526 0402 10K
R1502 3K3
R1525 10K
R1520 0402 10K
R1521 10K
R1528 10K
U500A
W25Q32JVSSIQ
R1519 15E 0603
R1512 15E 0603
R1518 15E 0603
R1511 15E 0603
SPI0_MOSI
SPI0_MISO
SPI0_SIO2
SPI0_SIO3
SPI0_CLK
SPI0_CS
R1522
T1500
BSS138
CS_SPI0
POR
U500B
C1500 100nF 50V
C1505 4.7uF 16V
R1513 0402 3K3
R1517 0402 1K
C1504 1nF 50V
C1503 1nF 50V
R1523 0402 0E
TP1504 1mm
TP1503 1mm
TP1502 1mm
TP1501 1mm
TP1500 1mm
LD1500 LGT676-P1Q2-24 GREEN
LD1501 LY T676-R1S2-26 YELLOW
R1501 0402 1K5
R1504 0402 1K5
R1507 0402 560E
R1509 0402 560E
R1500 0603 390E
R1503 0603 390E
X1501 and X1501 both open in NORMAL operation
X1500
X1502
NETX51_USB_DPOS
NETX51_USB_DNEG
Z1500
TPD4E05U06
NEWAYS
NEWAYS TECHNOLOGIES BV
SCIENCE PARK 5010
5692 EA SON
PRODUCTNAME : STM ATB Processor board SAP-H
TITLE : Profibus - NetX51 MEM
CUSTOMER :
PROJECTNR : L17002 / L17008
REVIEW : FvdH, FCa, PMa
APPROVED : Released
DESIGNER : C. Voogt / J. Vergoossen
PRODUCTCODE : STM-ATB-SAP-003 1002300
D 03-05-2018
E 03-07-2018
F 28-03-2019
G 15-04-2019
H 19-04-2019
SHEET : 130 - 15
SHEETS: 17
SIZE: A3

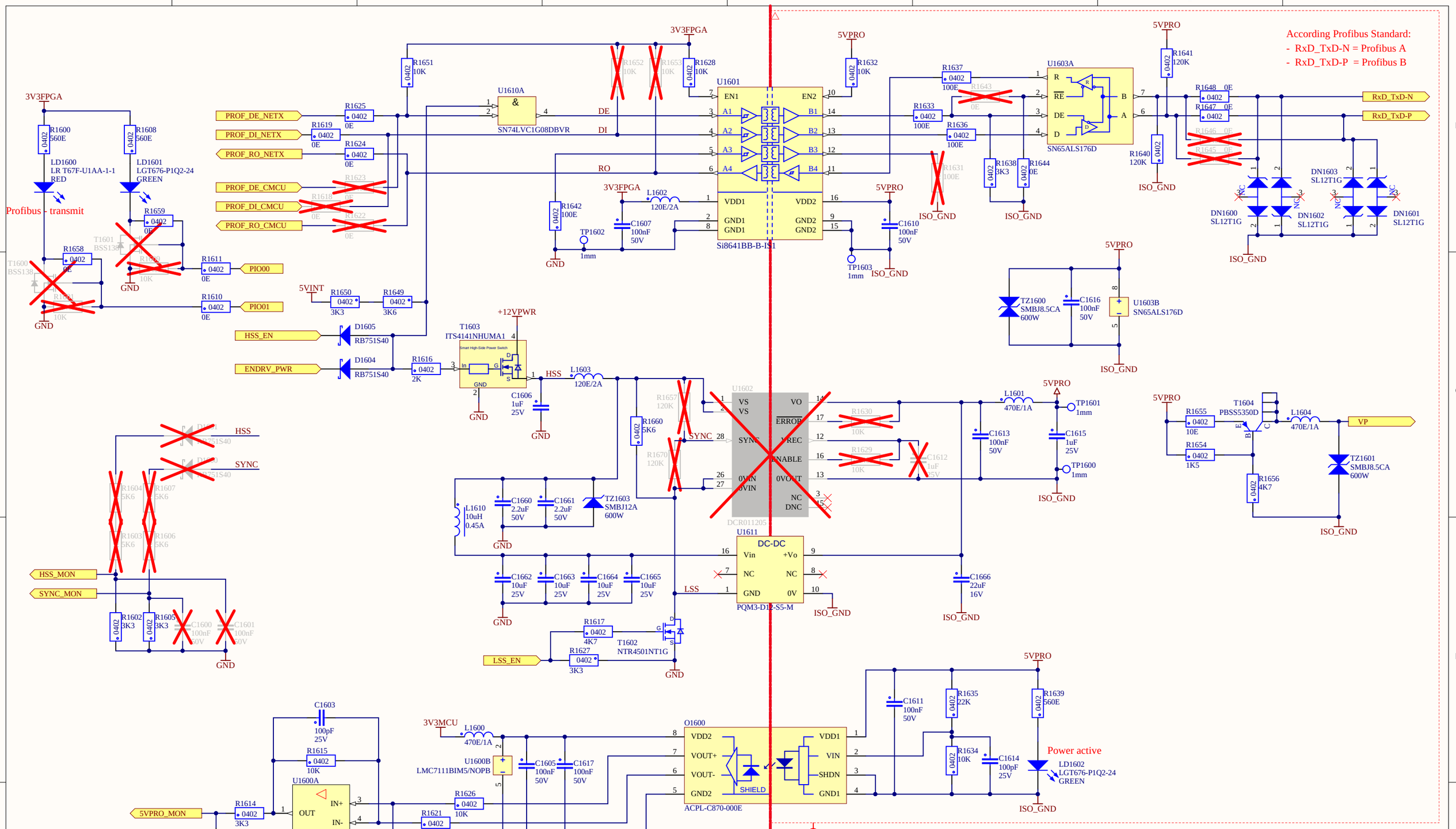

NEWAYS

NEWAYS TECHNOLOGIES BV
SCIENCE PARK 5010
5692 EA SON

PRODUCTNAME : STM ATB Processor board SAP-H

TITLE : Profibus - RS485

CUSTOMER :

PROJECTNR :	L17002 / L17008
REVIEW :	FvdH, FCa, PMa
APPROVED :	Released
DESIGNER :	C. Voogt / J. Vergoossen

PRODUCTCODE : STM-ATB-SAP-003 1002300

D	03-05-2018
E	03-07-2018
F	28-03-2019
G	15-04-2019
H	19-04-2019

SHEET : 130 - 16 SHEETS: 17 SIZE: A3

DESCRIPTION MUST BE EXTENDED WITH PCB PRODUCT NUMBER

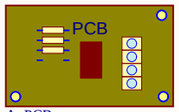

A_PCB

UL LOGO BOTTOM

VENDOR LOGO BOT

ROHS LOGO TOP

SMALLER

12NC PCA

19.05 X 6.35

TOOLING / REFERENCE HOLES

MH1700 TOOLING-HOLE 2.4NPT

MH1701 TOOLING-HOLE 2.4NPT

FIDUCIALS PLACED ON TOP

FID1701 FIDUCIAL-BOARD

FID1703 FIDUCIAL-BOARD

FID1705 FIDUCIAL-BOARD

FIDUCIALS PLACED ON BOTTOM

FID1700 FIDUCIAL-BOARD

FID1702 FIDUCIAL-BOARD

FID1704 FIDUCIAL-BOARD

NEWAYS

NEWAYS TECHNOLOGIES BV
SCIENCE PARK 5010
5692 EA SON

PRODUCTNAME : STM ATB Processor board SAP-H

TITLE : Mechanical-Schematic

CUSTOMER :

PROJECTNR :	L17002 / L17008
REVIEW :	FvdH, FCa, PMa
APPROVED :	Released
DESIGNER :	C. Voogt / J. Vergoossen

PRODUCTCODE : STM-ATB-SAP-003 1002300

D	03-05-2018
E	03-07-2018
F	28-03-2019
G	15-04-2019
H	19-04-2019

SHEET : 130 - 17 SHEETS: 17 SIZE: A3